Security Barrier Detail

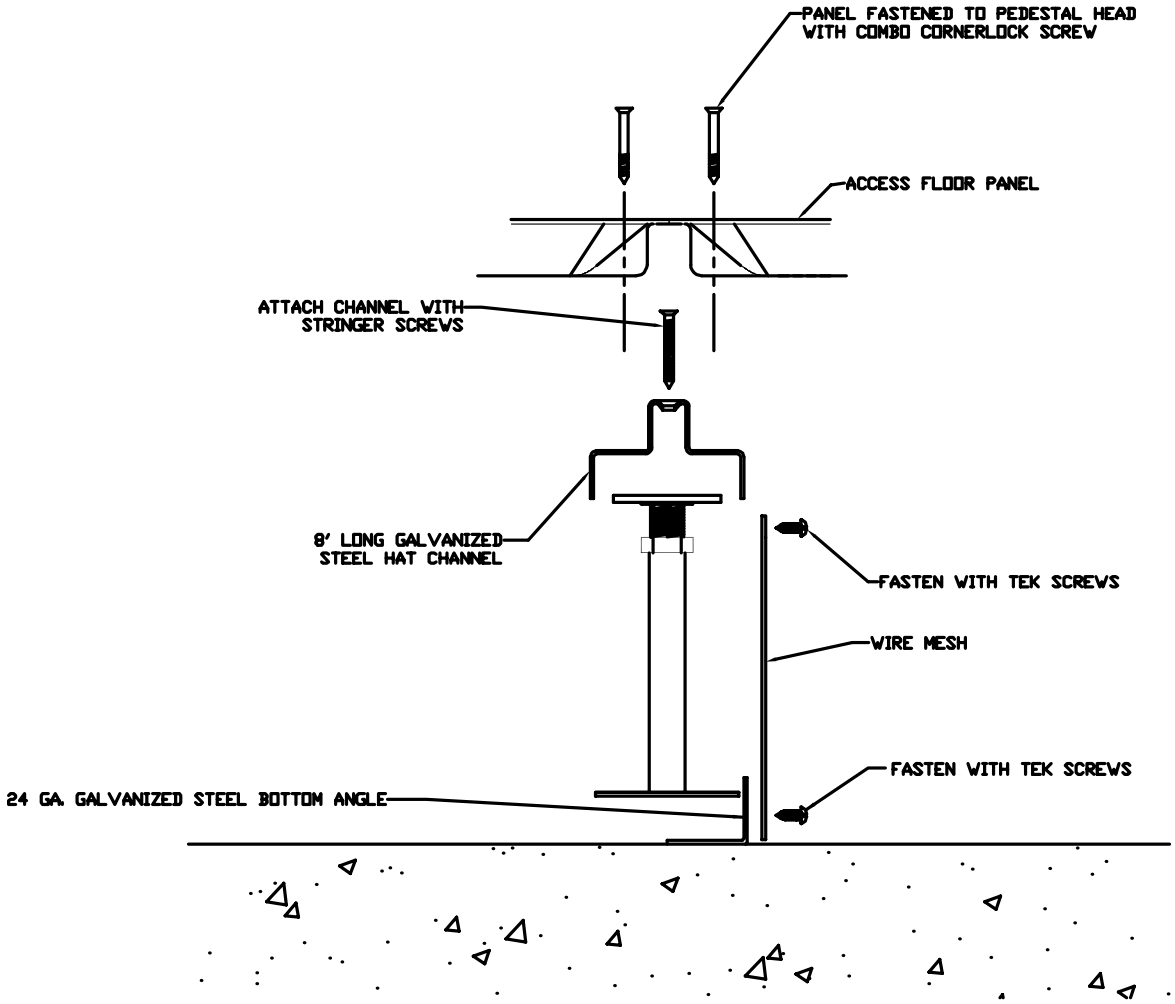

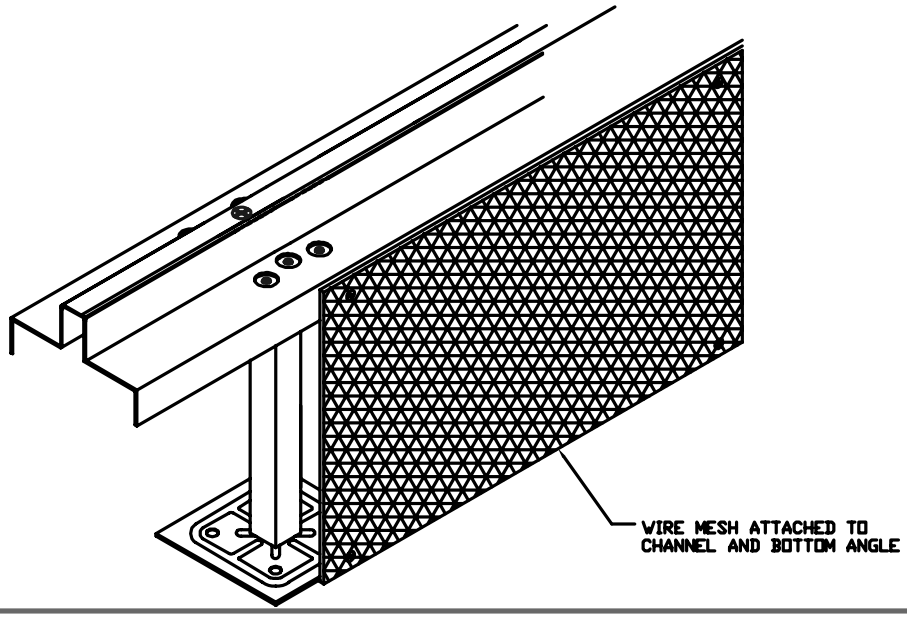

Tate Access Floors, Inc.
7510 Montevideo Road
Jessup, MD 20794
Tel (410) 799-4200 Fax (410) 799-4207

© 2005 Tate Access Floors, Inc.